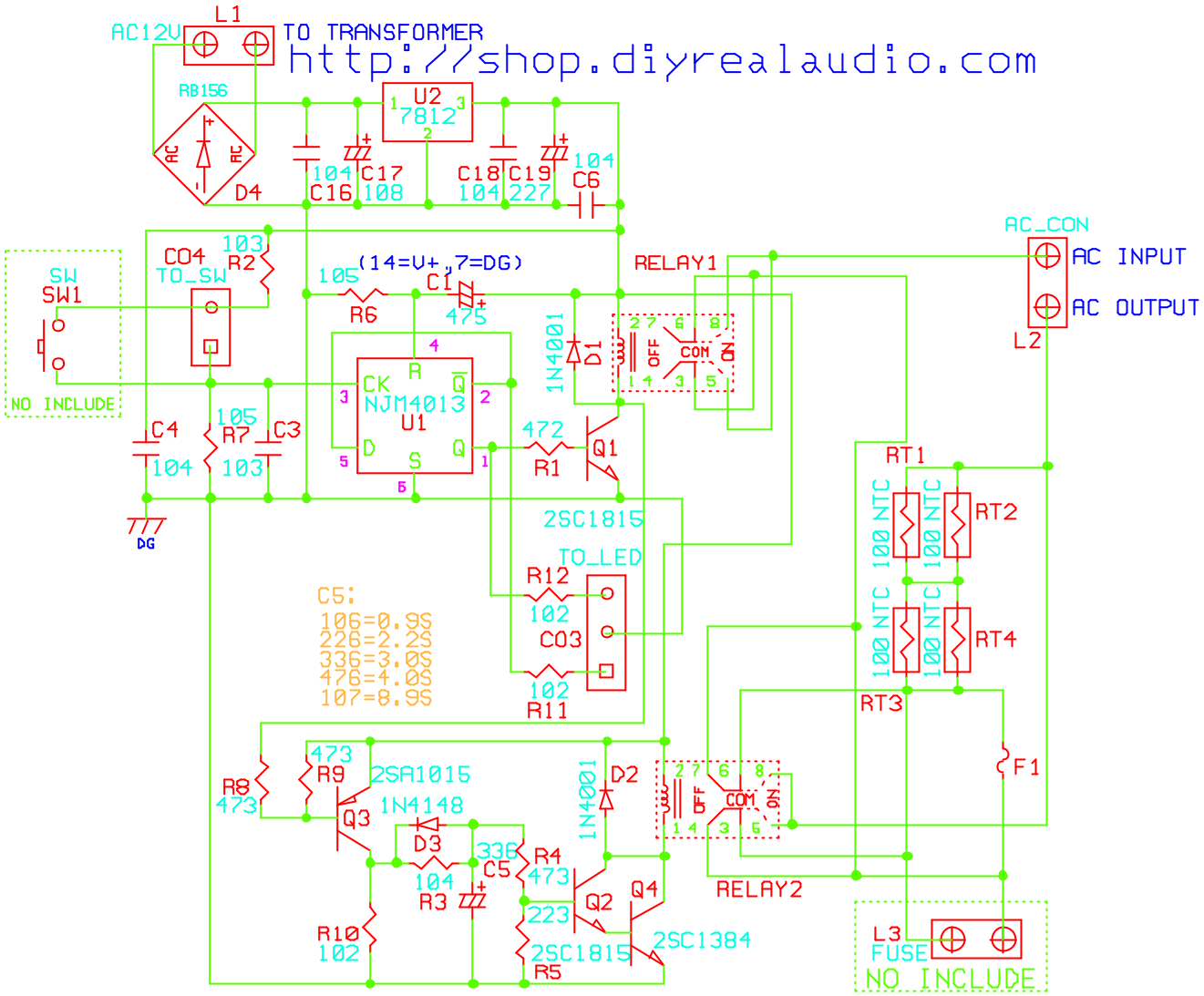
AC12V
L1
TO TRANSFORMER
http://shop.diyrealaudio.com
RB156
D4
U2
7812
104
C16
C17
108
C18
104
C19
227
C6
104
AC_CON
AC INPUT
AC OUTPUT
L2
SW
SW1
NO INCLUDE
CO4
TO_SW
103
R2
105
R6
(14=V+ ,7=DG)
C1
475
RELAY1
1N4001
D1
OFF
COM
ON
CK
NJM4013
U1
R
Q
D
S
C4
104
105
R7
103
C3
DG
472
R1
Q1
2SC1815
TO_LED
R12
102
CO3
102
R11
C5:
106=0.9S
226=2.2S
336=3.0S
476=4.0S
107=8.9S
RT1
RT2
RT3
RT4
100 NTC
F1
473
R9
2SA1015
R8
473
Q3
1N4148
D3
104
R3
336
C5
R4
473
223
R5
2SC1815
Q2
Q4
2SC1384
R10
102
1N4001
D2
RELAY2
L3
FUSE
NO INCLUDE